# QUANTUM OUTLOOK 2022

## QUANTUM SOFTWARE

Fact Based Insight

Jan 2022

# The evolution of the tech stack

**Classical computing c. 1950's**

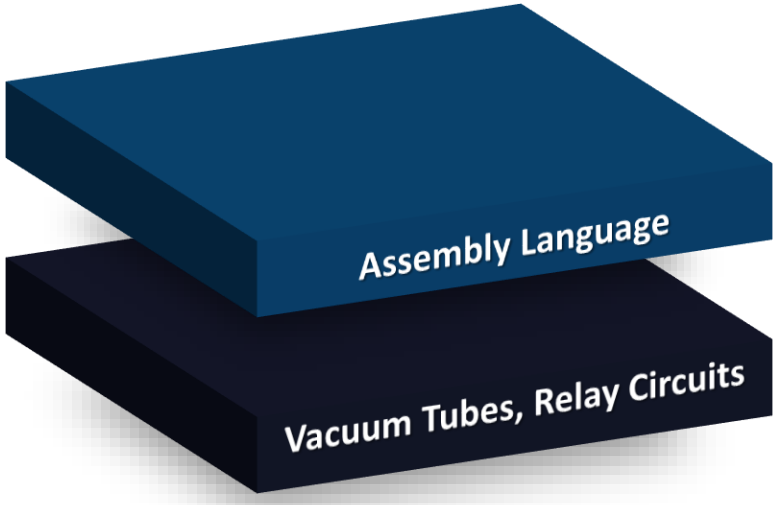


**Classical computing c. 1990's**

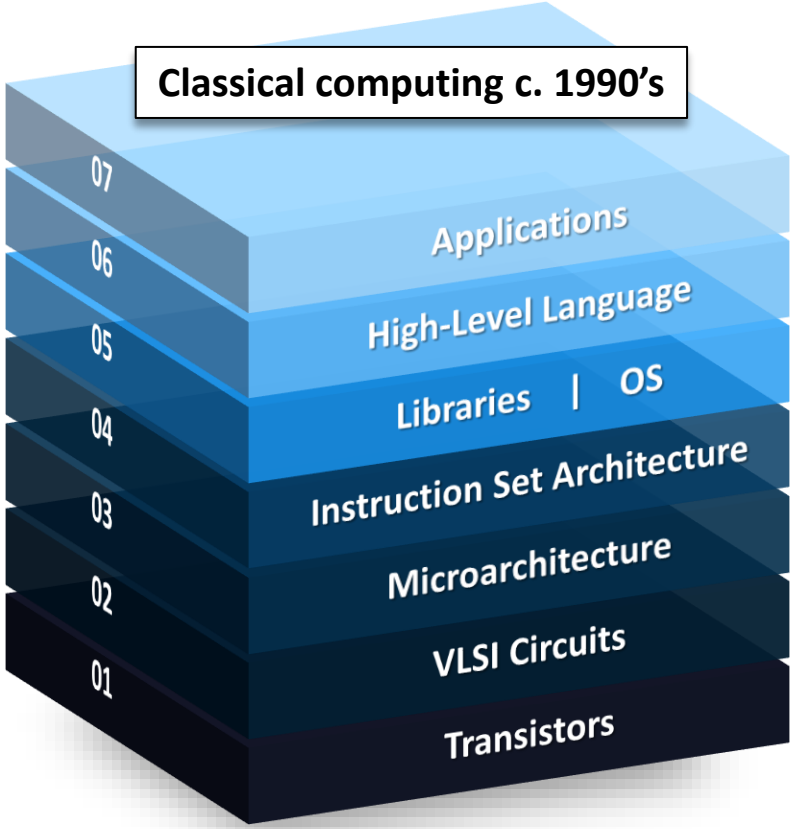

# New challenges

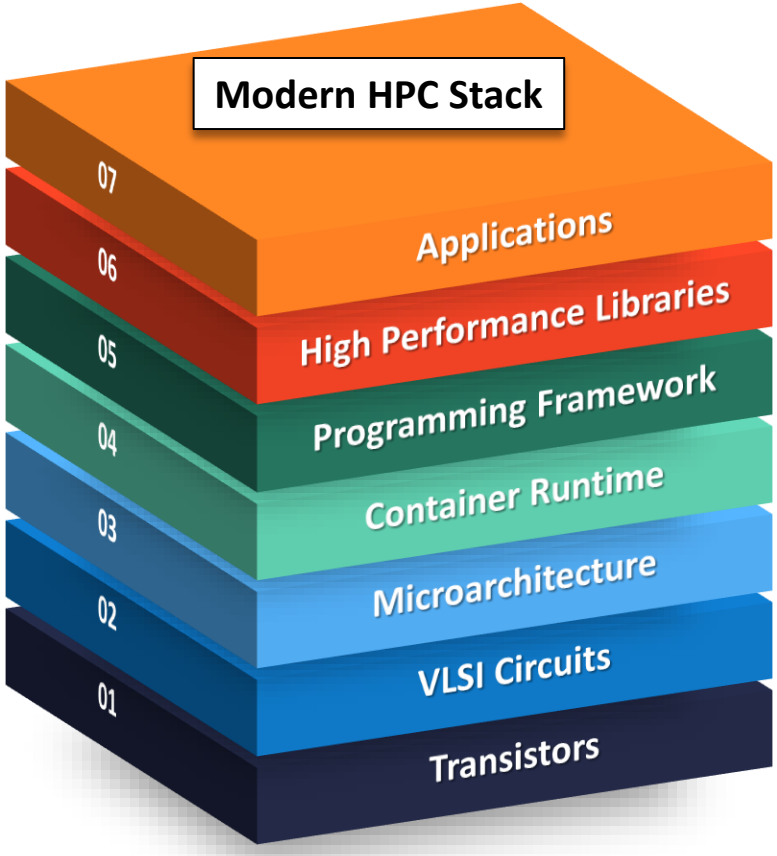


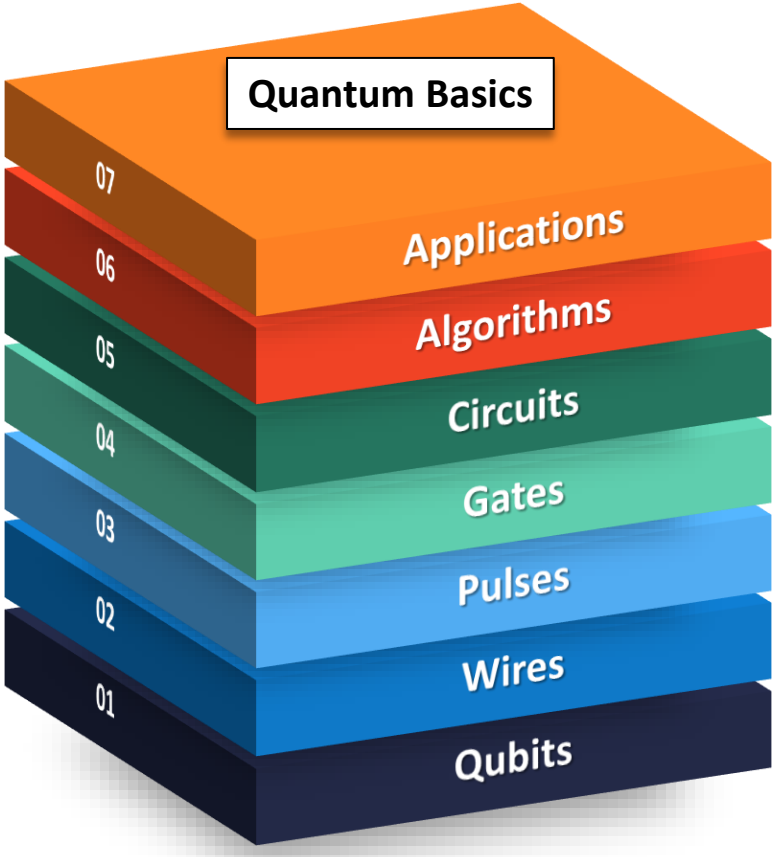

# The emerging quantum stack and its challenges

**CONTROL LOGIC**

Pulse & timing calibration
Optimal Control
*Decoding*

**CONTROL PLANE**

Crosstalk
Wiring/integration
Heat management

**QUANTUM PLANE**

Fidelity
Native gates
Connectivity
Interconnects

**SIMULATOR**

Verification & validation
Performance

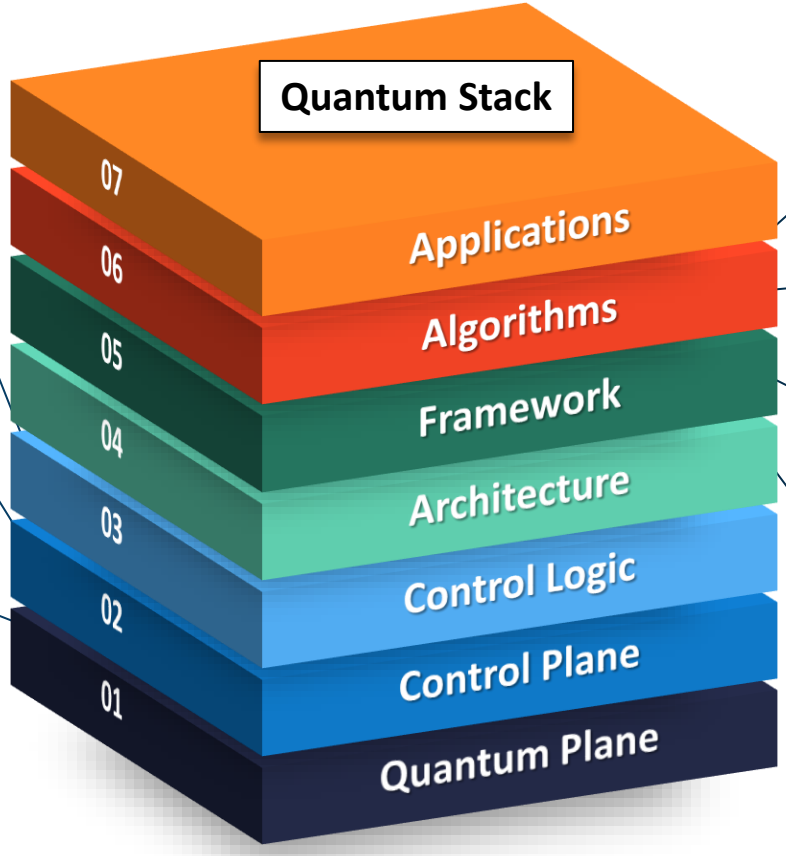


**APPLICATIONS**

Development mgt.
Workflow mgt.

**ALGORITHMS**

High level languages
Libraries

**FRAMEWORK**

Circuit model & alternatives
Optimising compilers

**ARCHITECTURE**

QPU kernel
*Quantum error correction*
*Magic state factories*
*QRAM*

# Quantum pioneers

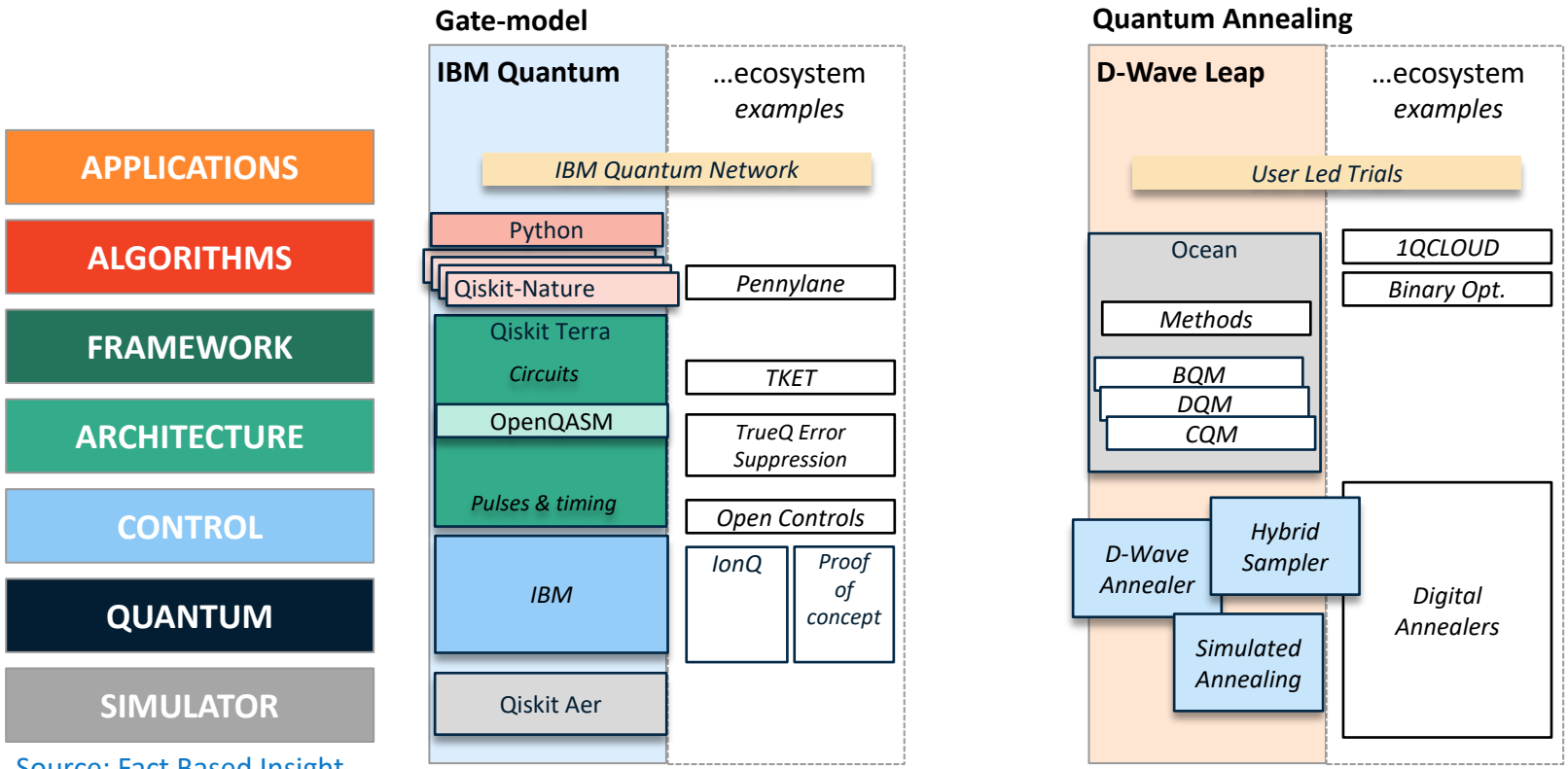


Source: Fact Based Insight

# Early gate-model full-stack players

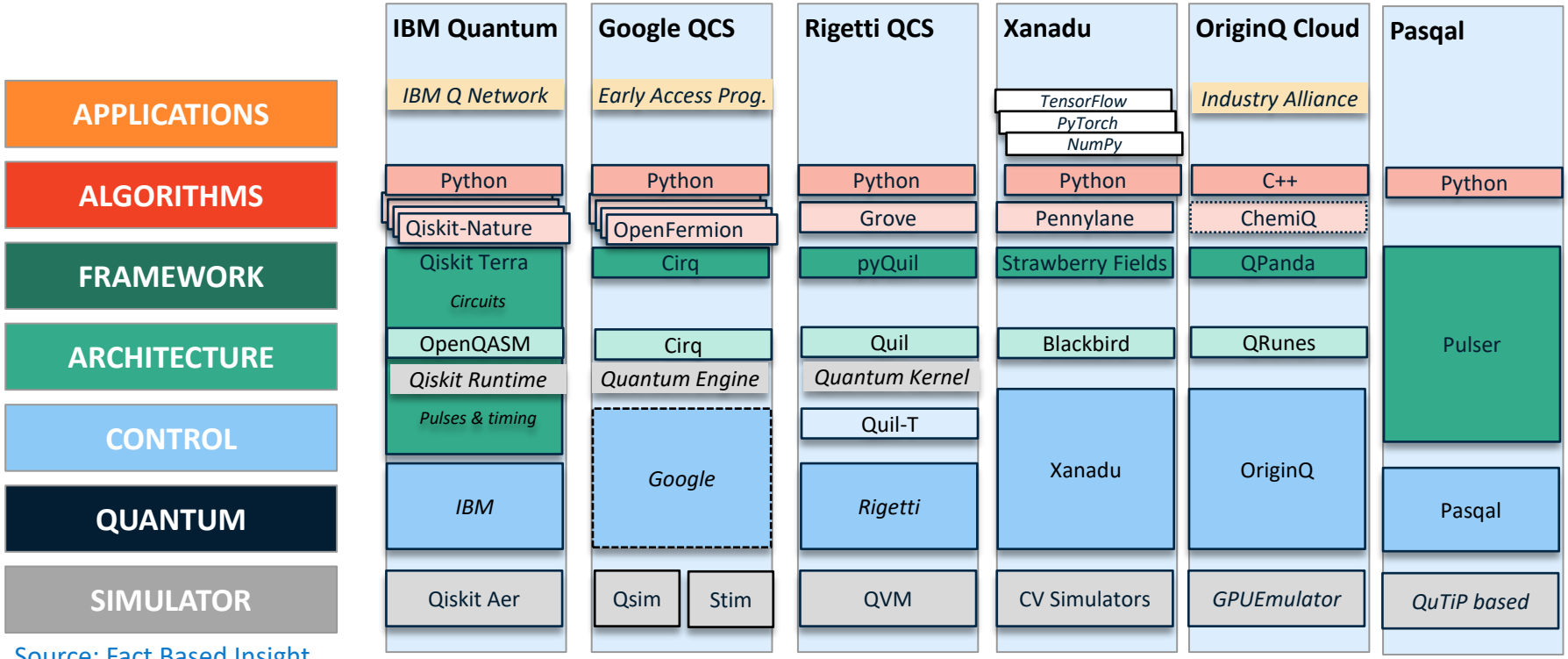


Source: Fact Based Insight

# Quantum PaaS

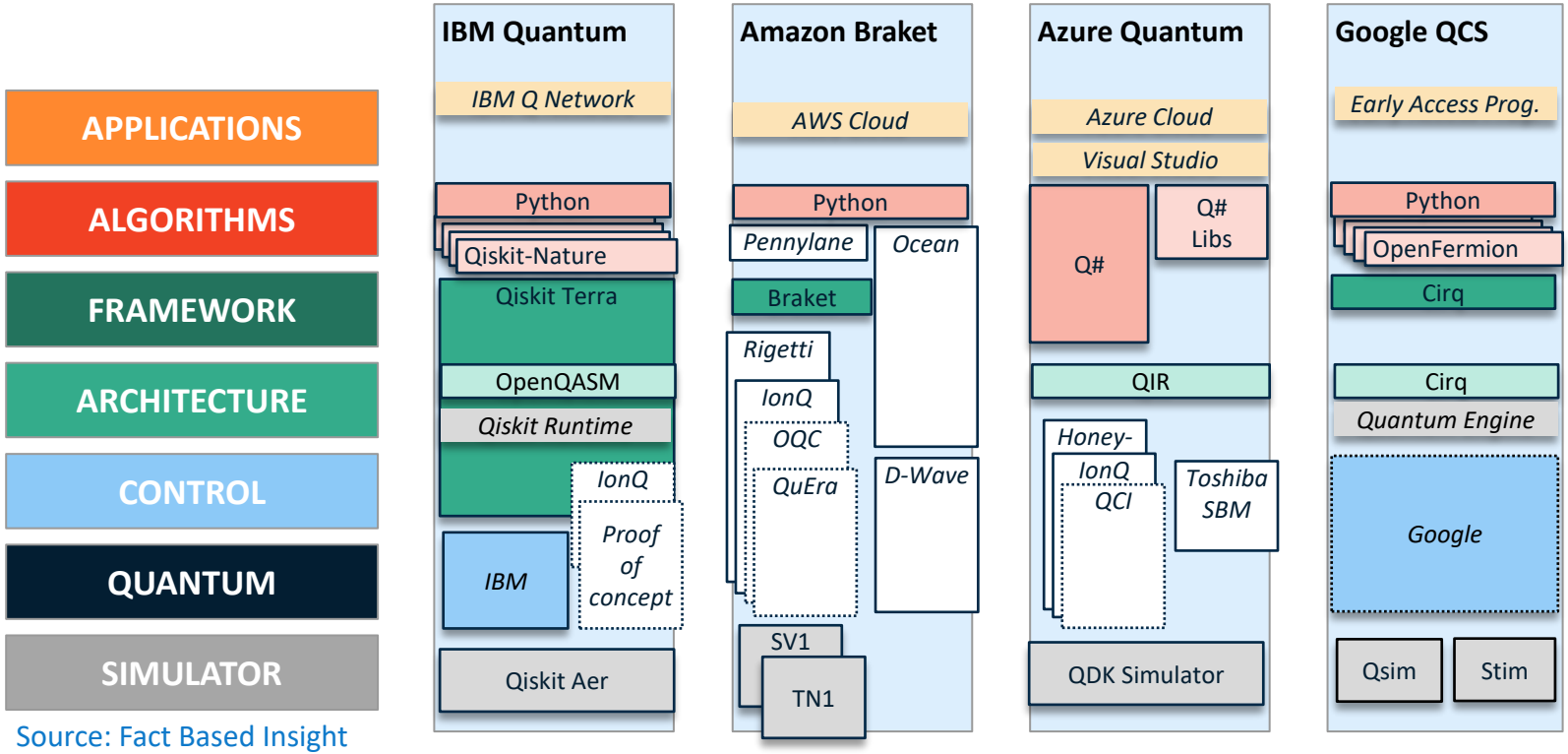


Source: Fact Based Insight

# Quantum simulators

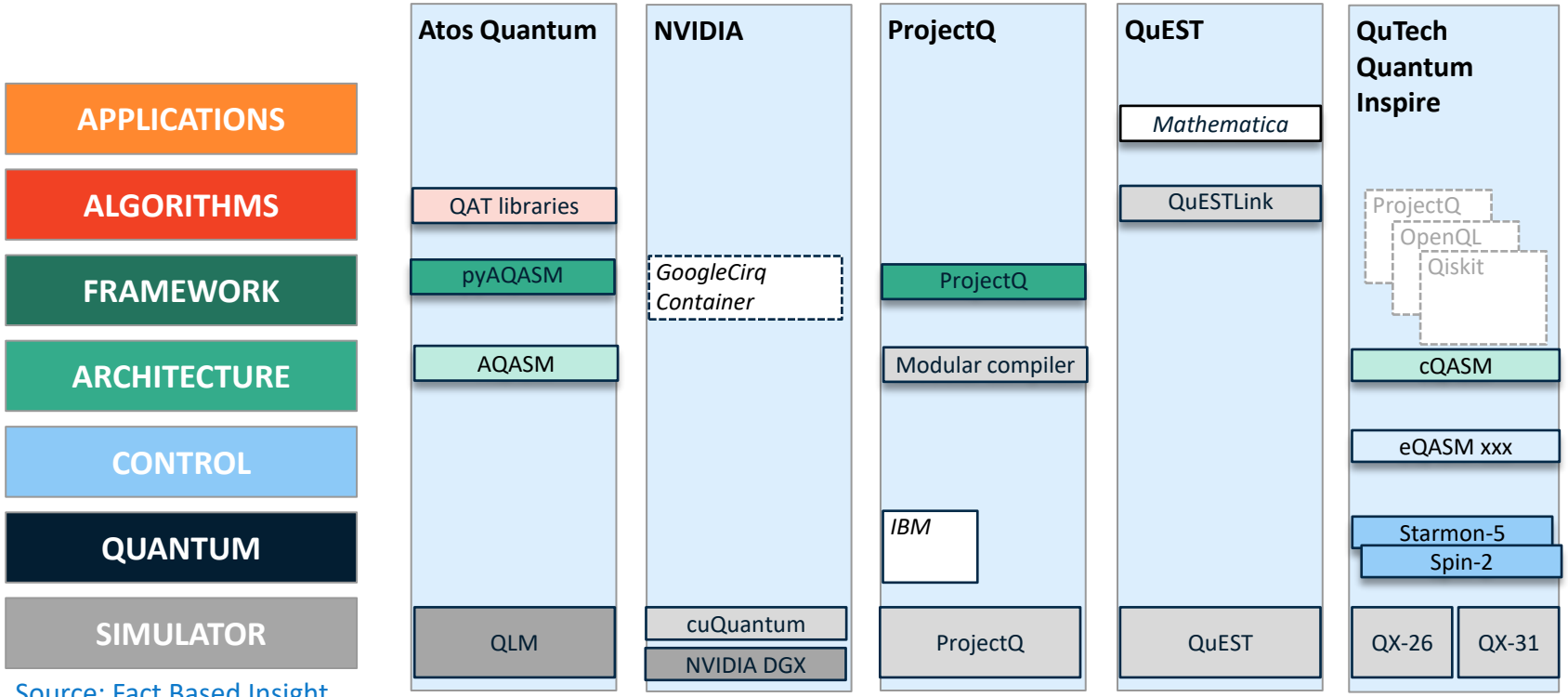


Source: Fact Based Insight

# Algorithms to applications

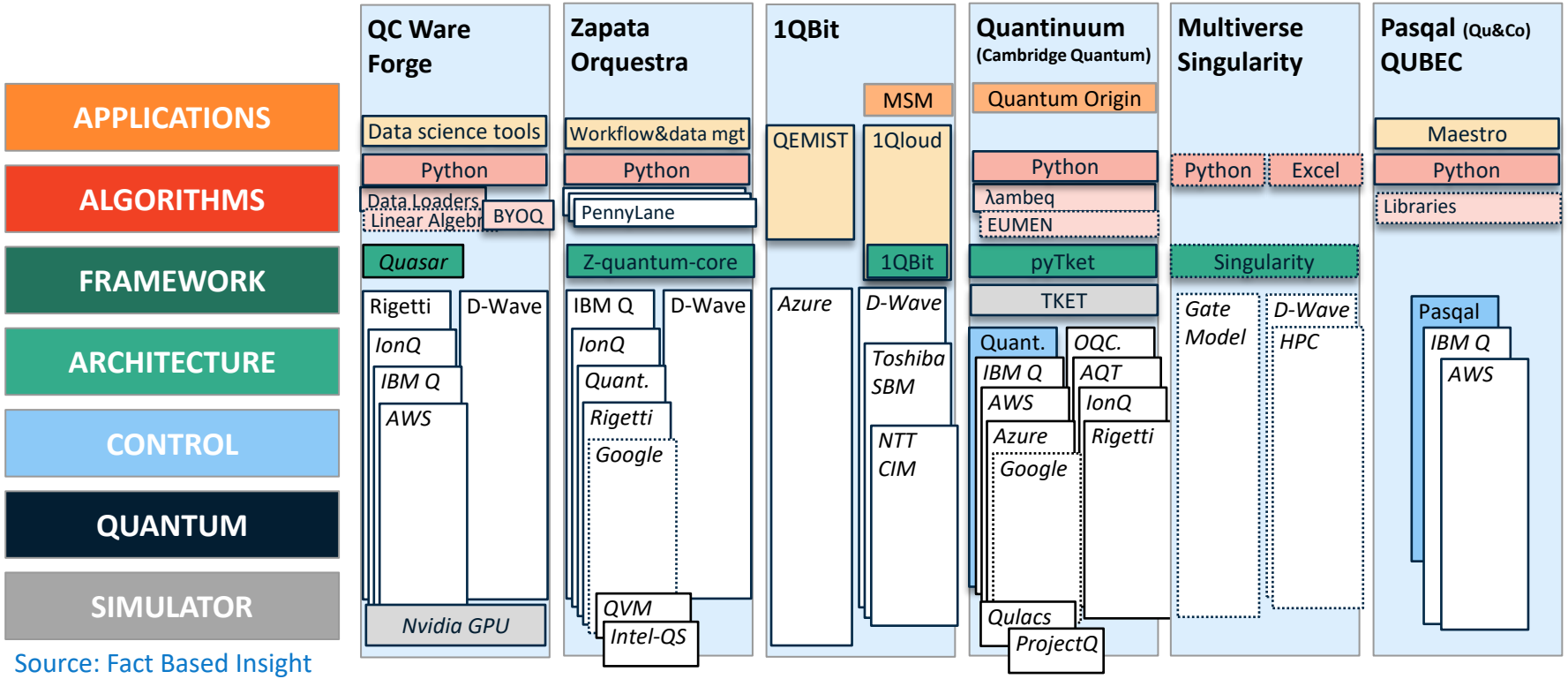


Source: Fact Based Insight

# Better quantum tools

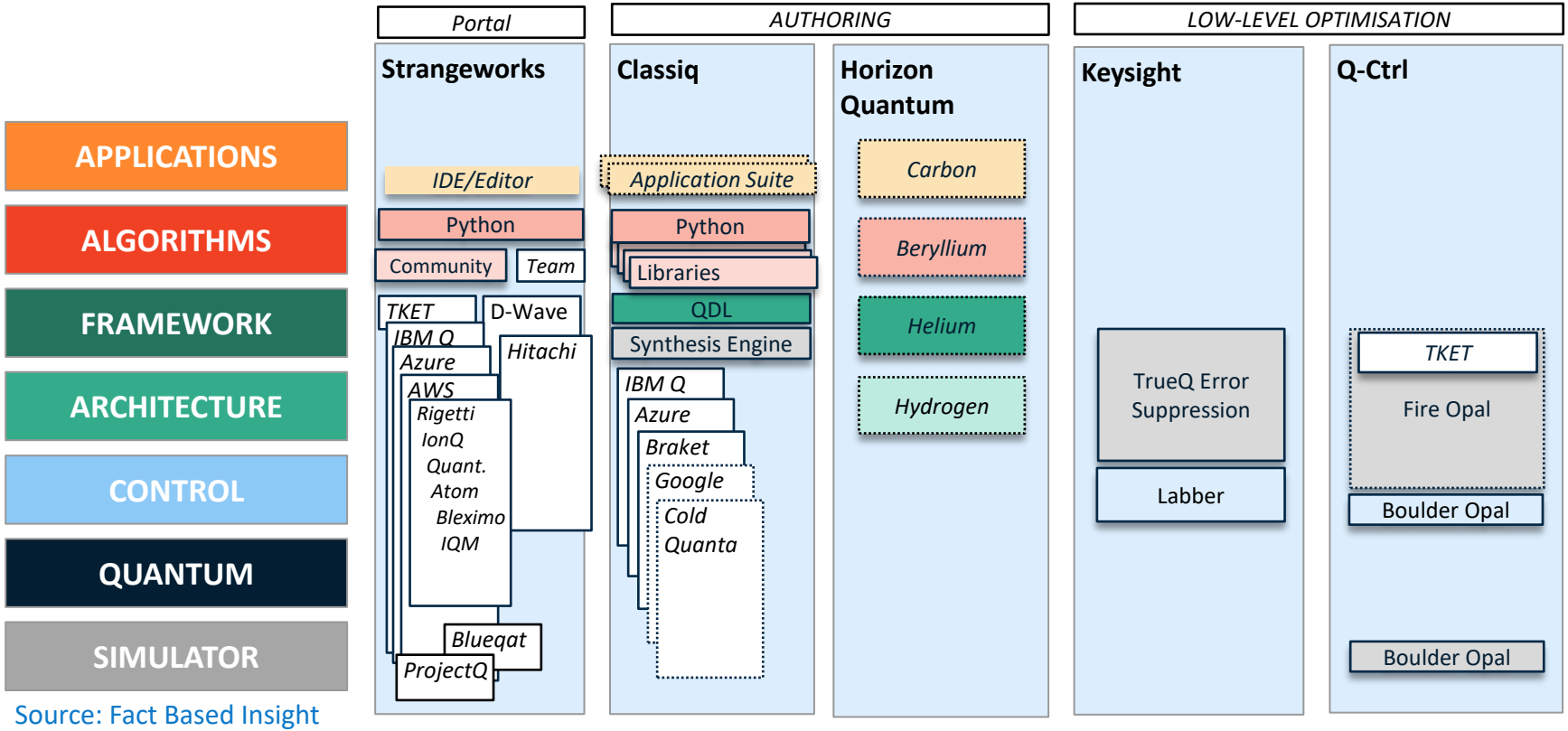


Source: Fact Based Insight

# Building-out low-level control

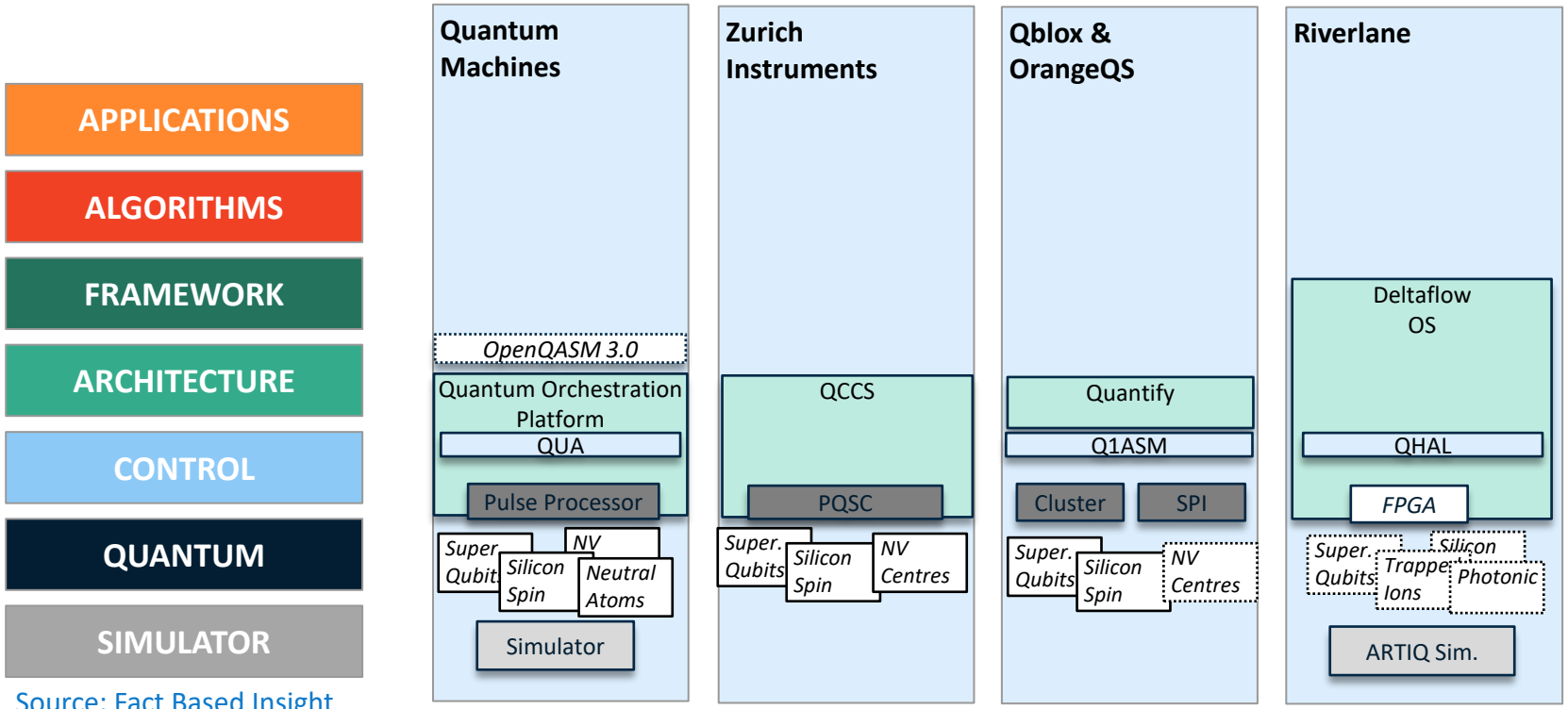


Source: Fact Based Insight

# Current research themes

| | Error Mitigation for NISQ | Error Correction for FTQC | Algorithms & applications |
|---|---|---|---|
| APPLICATIONS | Error tolerant use cases | | Real world use cases with exponential speedups |
| ALGORITHMS | Zero-noise extrapolation | | Quantum languages |
| | Post-selection | | 'Better than quadratic' speedups |
| FRAMEWORK | Low-depth circuits | | Validation by formal methods |
| | Probabilistic error cancellation | | |
| ARCHITECTURE | Randomised compiling | Error correcting codes | QRAM |
| | Error adaptive compiling | Magic state factories | |
| CONTROL | Floqet calibration | | |
| | Optimal control | Decoders | |
| QUANTUM | | | |
| SIMULATOR | Noise model simulation | | |

Source: Fact Based Insight

# For more information and supporting references

- Factbasedinsight.com/quantum-software-outlook-2022
- Factbasedinsight.com/quantum-algorithms-outlook-2022
- Factbasedinsight.com/quantum-hardware-outlook-2022
- Factbasedinsight.com/quantum-internet-outlook-2022

Source: Fact Based Insight